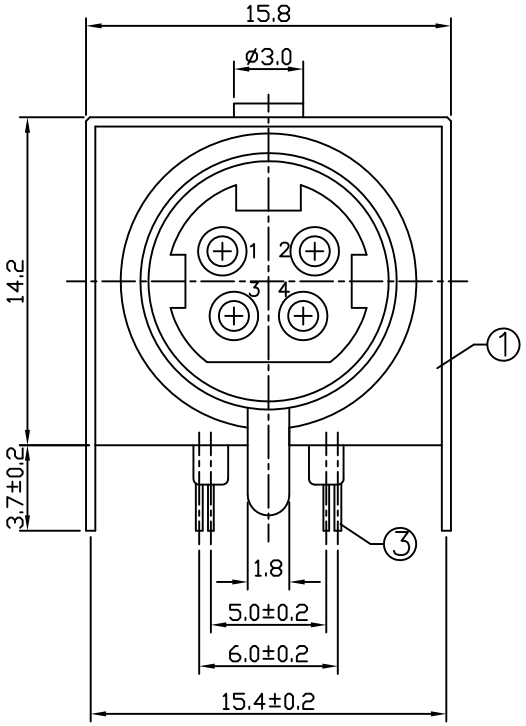

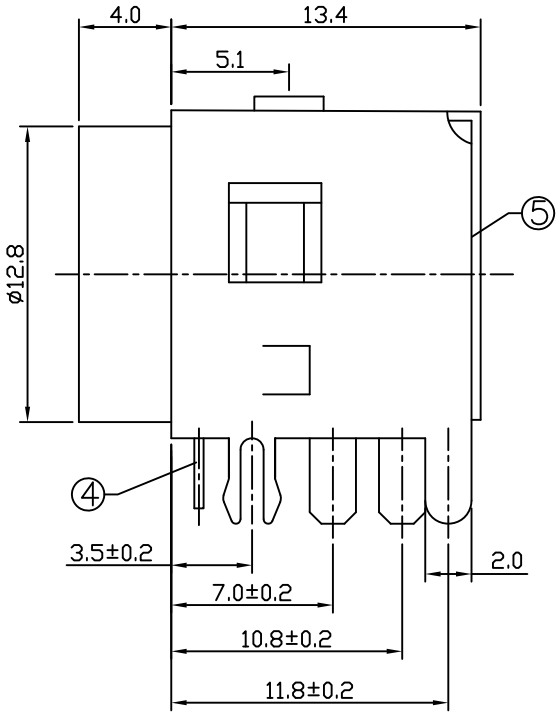

P.C.B LAYOUT
TOP VIEW

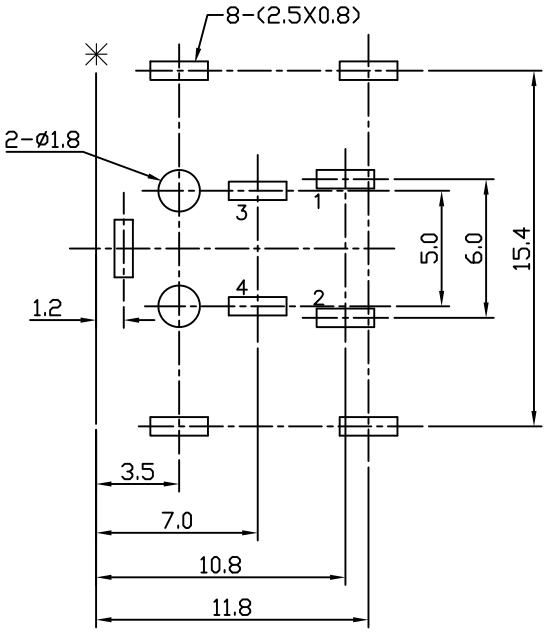

SPECIFICATION
1.Rating :DC 50V 1.0A
2.Contact resistance : ≦0.03Ω
3.Insulation resistance : ≧100MΩ (DC250V)
4.Withstand voltage : 500VAC
5.Insertion and extraction force : 5–35N
6.life test : 1,000 cycles

NO.	DESCRIPTION	QTY	MATERIAL	PLATING
5	COAT	1	BRASS	Ni–Plating
4	CONTACT FOOT	1	BRONZE	Ni–Plating
3	CONTACT FOOT	4	BRONZE	Ag–Plating
2	COVER	1	PBT	
1	HOUSING	1	PBT	

UNLESS OTHERWISE SPECIFIED TOLERANCES ARE

.x ±0.30
.xx ±0.20
.xxx ±0.10

.x° ±3.0°
.xx° ±2.0°
.xxx° ±1.0°

UNIT: MM	TYPE: DIN SOCKET	MODEL NO: HDIN–422–ROD–10	PAPER NO: A4
			PAGE 1 OF 1
			SCALE 3:1 / VER 1
DESIGNER BY:	Peter		
CHECK BY:	Sharon		
APPROVED BY:	Jason		

益富科技有限公司
TEL:886-3-5511680 FAX:886-3-5511605